THIS DOCUMENT CONTAINS CONFIDENTIAL OR PROPRIETARY INFORMATION WHICH IS THE PROPERTY OF QSC, LLC, THAT MAY NOT BE DISCLOSED, REPRODUCED OR USED WITHOUT EXPRESS WRITTEN CONSENT FROM QSC, LLC. NO PORTION OF THIS DOCUMENT MAY BE REPRODUCED,REDISTRUBUTED, OR OTHERWISE DISCLOSED TO ANY THIRD PARTY WITHOUT QSC'S WRITTEN PERMISSION.

REVISION			
REV	DESCRIPTION	BY	DATE
A	RELEASE FOR PUBLISHING	CH	29-MAY-26

NOTES: UNLESS OTHERWISE SPECIFIED

1. NET WEIGHT APPROX. 26.7 KG [58.9 LBS].
2. SYMBOL ⊕ INDICATES CENTER OF GRAVITY.
3. [3] SYMBOL ◎ INDICATES POLE MOUNT LOCATION, M20 THREAD, 1 PLACE.
4. GRILLE NOT SHOWN FOR CLARITY.

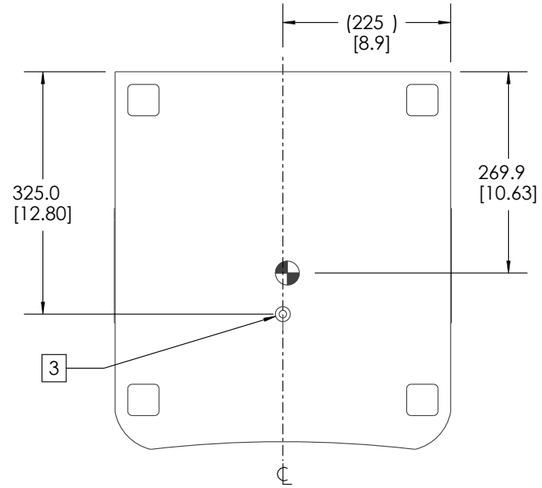

SCALE 1:11

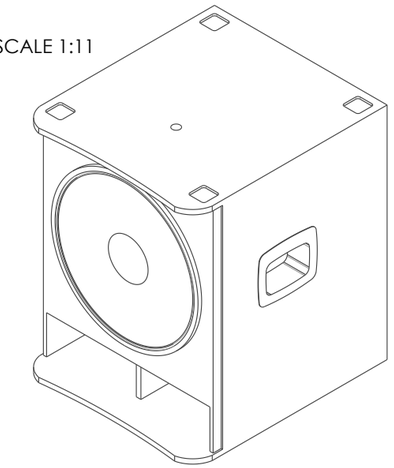

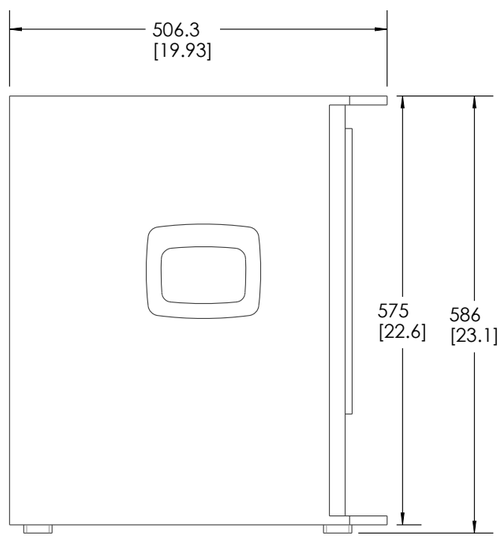

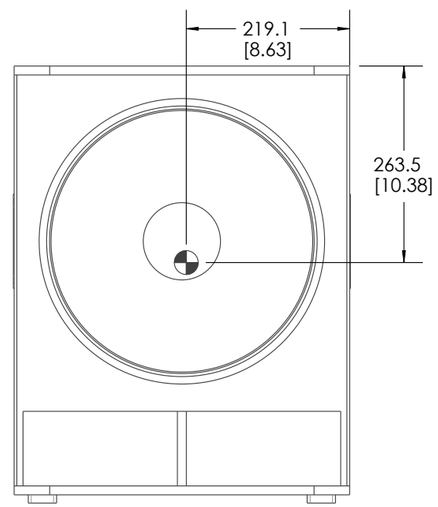

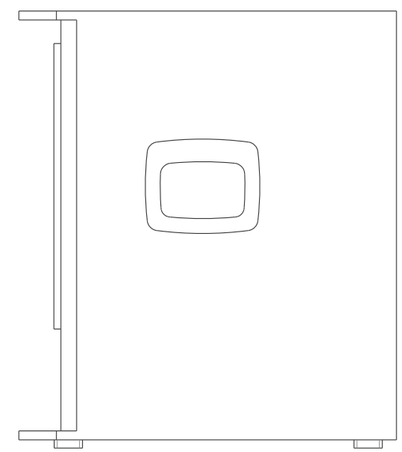

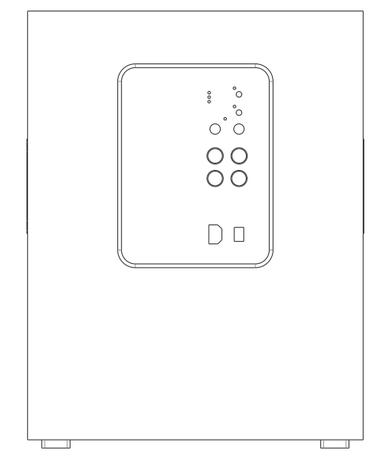

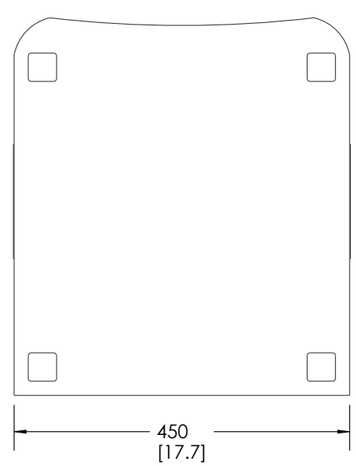

UNLESS OTHERWISE SPECIFIED DIMENSIONS ARE IN MM [IN] TOLERANCES ARE: DECIMALS X ± 3 [.12] ANGLES ±X°	CAD GENERATED DRAWING DO NOT MANUALLY UPDATE	QSC, LLC 1675 MACARTHUR BOULEVARD COSTA MESA, CA 92626 USA
MATERIAL SEE NOTES	APPROVALS: DRAWN BY C. HYMAN	LOUDSPEAKER, CS15, 100-240V, MARKETING MODEL, 2D
FINISH SEE NOTES	MECH ENGINEER T. AMUNDSON	
DO NOT SCALE DRAWING	TECH DIRECTOR C. SMOLEN	SIZE B · CAGE CODE 00PW4 · DWG. NO. FG-901690-2D · REV A
PROJECTION SYMBOL	MFG ENGINEER A. BECKENDORF	SCALE: 1:8 · CAD FILE: FG-901690-2D.A.1 · SHEET: 1 OF 1

Form: QMS100206 Rev C